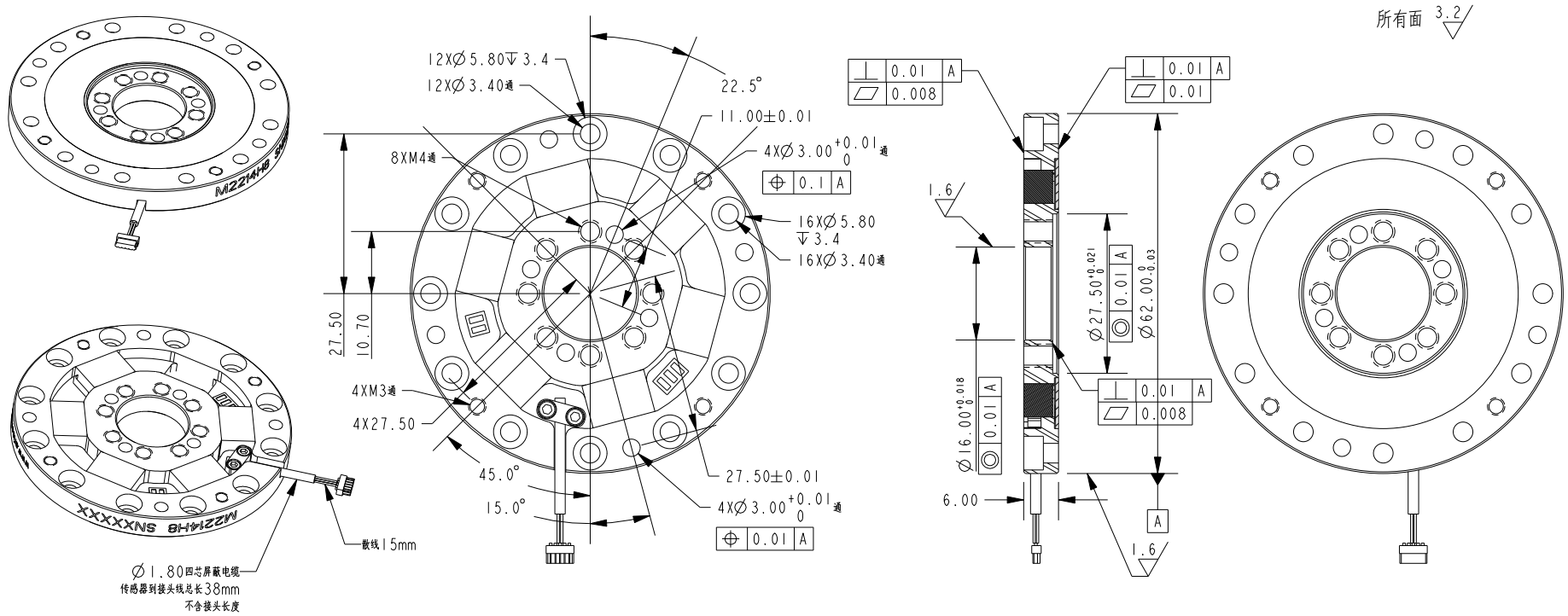

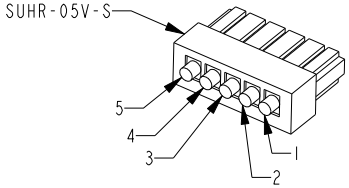

SPECIFICATIONS	
CAPACITY (Nm)	150
OVERLOAD CAPACITY (%F.S.)	250
OUTPUT @ F.S. (mv/V)	1.3±0.2
POWER SUPPLY (V)	5
BRIDGE RESISTANCE (Ω) NOMINAL	700
NON-LINEARITY (%F.S.)	0.5
HYSTERESIS (%F.S.)	1.0
OPERATING TEMP. RANGE (°C)	-20 TO +90
CROSSTALK (%F.S.)	1.0
AXIAL FORCE FOR CROSSTALK (N)	200
RADIAL FORCE FOR CROSSTALK (N)	200
BENDING MOMENT FOR CROSSTALK (Nm)	30
TORSION ANGLE (CALCULATED)	0.04°
TORSIONAL STIFFNESS (KNm/RAD)	95
BENDING STIFFNESS (KNm/RAD)	23
MASS (KG)	0.09

NOTE: THE OVERLOAD CAPACITIES FOR BENDING MOMENT, AXIAL AND RADIAL FORCE EXCEED 200% OF THOSE USED FOR CROSSTALK MEASUREMENT

DRAWING IN THIRD ANGLE PROJECTION

WIRING CODE		
	COLOR	FUNCTION
1	RED	+EX
2	WHITE	-SIG
3	GREEN	+SIG
4	BLACK	GND
5	SHIELDING WIRE	

SUNRISE INSTRUMENTS

www.srisensor.com

ROBOT JOINT TORQUE LOADCELL
D67MM, 150 Nm

UNLESS OTHERWISE SPECIFIED DIMENSIONS ARE IN MM	M2214H8	REV. A